DelGeo

ПОСТАВКА ГЕОДЕЗИЧЕСКОГО ОБОРУДОВАНИЯ

FJDTrion

Resources & Support

Support Center | FJD Trion | Creative Portal | FJD Trion Creative

Important

This Quick Start Guide provides basic setup instructions and does not replace the full User Manual. Refer to the User Manual for scanning, data processing, and safety instructions.

For local service, contact your dealer or FJD Trion representative. When contacting support, have the device serial number ready.

© FJDynamics. All rights reserved.

Specifications and included accessories may vary by region and package.

Transforming the World with World Models

FJDTrion

FJDTrion

FJD Trion C1

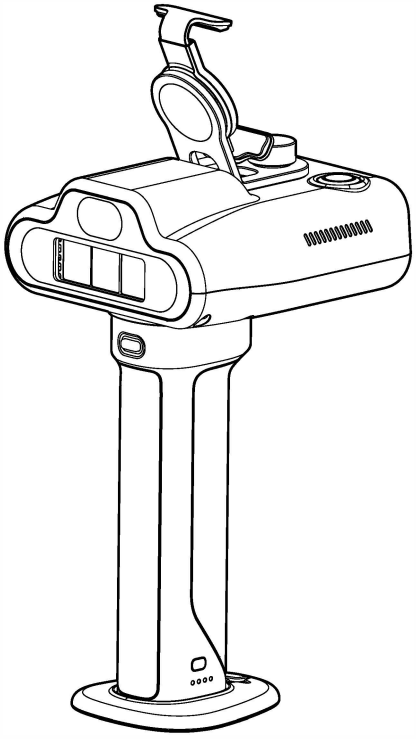

Quick Start Guide

V1.0

Attention

This Quick Start Guide does not replace the User Manual. Improper setup or operation may affect scanning performance or safety. Read the User Manual before use and follow all safety and operating instructions.

Before You Start

Package and pre-use check

- Make sure the C1 main unit, battery, charger and required accessories are available.
- Fully charge the battery before first use.
- Follow the User Manual when operating the device.

Get Started

① Charge the Battery

- Connect the battery to the charger.
- Check the battery indicator before installation.
- Use only approved charging accessories.

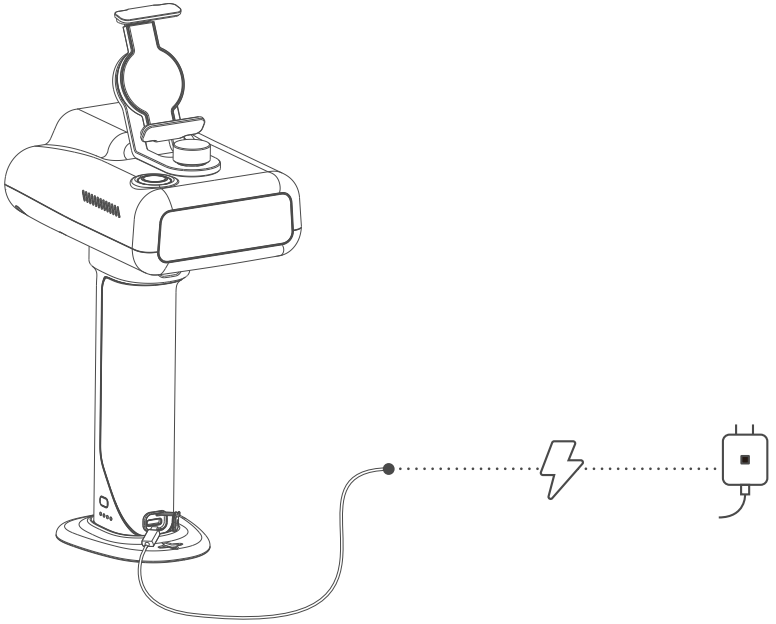

② Install the Battery

- Align the battery with the main unit.
- Install the battery securely before powering on.
- Do not force the battery into the device.

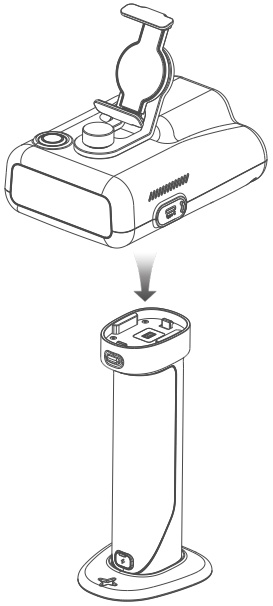

③ Power On

- Press and hold the power button for 0.2–1 second.
- Wait until the status indicator becomes solid.
- If the device does not start, check the battery level and installation.

