FJDTrion™

DelGeo

ПОСТАВКА ГЕОДЕЗИЧЕСКОГО ОБОРУДОВАНИЯ

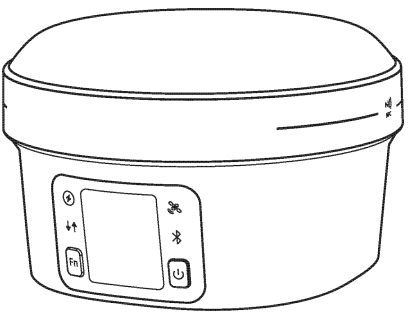

GNSS Receiver User Manual

Copyright Notice:

FJDynamics reserves the copyright for this manual and all content herein. No part of this manual may be reproduced, extracted, reused, and/or reprinted in any form or by any means without the prior written permission of FJDynamics. This manual is subject to change without notice.

EN

Revisions:

Version	Date	Description
1.0	2023.10.25	First release
1.1	2024.3.2	Revise WiFi instructions

Disclaimer

- The purchased products, services, and features are stipulated by the contract. All or part of the products, services, and features described in this manual may not be within the scope of your purchase or usage. Unless otherwise specified in the contract, all the content in this manual is provided "AS IS" without warranties of any kind, express or implied.
- The content of this manual is subject to change due to product upgrades and other reasons. FJDynamics reserves the right to modify the content of this manual without notice.
- This manual only provides guidance for use of this product. Every effort has been made in the preparation of this manual to ensure accuracy of the content, but no information in this manual constitutes a warranty of any kind, express or implied.

Preface

Thank you for using this FJD Trion GNSS Receiver from FJDynamics. This manual provides detailed instructions for use of this product. Read this manual carefully and follow the instructions to operate this product. If you have any questions, contact the customer service of FJDynamics.

 ©FJDynamics. All rights reserved.

Purpose

This manual introduces the physical characteristics, specifications, operation, and use of the product.

Technical Support

- FJDynamics official website: https://www.fjdynamics.com/
- FJDynamics customer service: service@fjdynamics.com

EN

Safety Instructions

Before using this product, make sure that you have read and understood the safety instructions and all the operation instructions and notes in the *FJD Trion GNSS Receiver User Manual*. Follow the safety instructions and all applicable local regulations.

Operation Environment:

1. Keep away from people, animals, electrical wires, tall buildings, airports, signal towers, and other obstacles, to avoid interference to GNSS signals and ensure the positioning accuracy.
2. Avoid working in extreme weather such as heavy rain, strong wind, thick fog, snow, and lightning.

Others:

1. Do not disassemble the product without authorization, which may invalidate the warranty.
2. Damage caused by force majeure events, such as lightning strikes, high voltage, and collision, is not covered by the warranty.
3. Use the device in strict accordance with the manual. When connecting cables such as data cables, hold the end of the plug and gently plug or unplug it. Do not pull the plug by force or twist the plug, which may break the pins.
4. Use the regulated power supplies accepted by FJDynamics, and strictly follow the rated voltages, to prevent damaging the radio, the field controller, and the receiver.
5. During charging, keep away from fire sources such as flammables and explosives, to avoid fire and other serious consequences.

©FJDynamics. All rights reserved.

6. During operation, do not power the receiver via the Type-C interface and the aviation connector at the same time.
7. Do not plug or unplug cables when the receiver is powered on, and replace the damaged cables in time to avoid personal injury.

EN

1 Product Introduction

1.1 Overview

V10i is a GNSS receiver designed, developed, and produced by FJDynamics. Powered by technologies such as RTK, AR, image measurement, voice recognition, and cloud interconnection, the product integrates the positioning, IMU, and wireless communication modules. It features a small size, light weight, and user-friendly design, and is easy to carry, operate, and manage, improving users' hardware and software experience.

1.2 GNSS Receiver

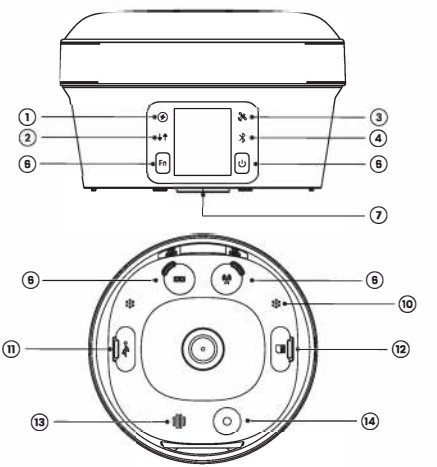

 ©FJDynamics. All rights reserved.

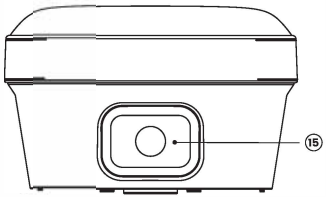

EN

No.	Name	Description
1	Power indicator (red, blue, and green)	Green: battery level of 60%-100%; Blue: battery level of 30%-60%; Red: low battery (<30%); Charging: flashes red during charging, and turns solid green after charging is complete.
2	Data indicator (blue and green)	Off: The base station does not transmit differential data, or does not start static collection. Solid green: The data link is established after settings. Flashing green: The differential data is transmitted, and the indicator flashes at the transmission frequency. Flashing blue: In the static mode, the indicator flashes at the collection interval when the interval is ≥ 1s, and flashes at 1s when the interval is < 1s.
3	Satellite indicator (red and green)	Off: no satellite tracking; Solid green: fixed solution; Flashing green: positioning but not in the fixed solution status; Flashing red: satellite tracking but not positioning; Flashing green and red alternatively: GNSS board exception.
4	Bluetooth indicator (blue)	Off: no Bluetooth connection. Solid on: Bluetooth connection established.

©FJDynamics. All rights reserved.

EN

No.	Name	Description
5	Function button	Press this button to select a function.
6	Power button	Press and hold this button for 3 seconds until the screen lights up to turn on the receiver. Press and hold this button for 5 seconds to turn off the receiver. Press and hold this button for 8 seconds to force a shutdown.
7	OLED screen	Show the device information.
8	Aviation connector interface	For data transmission, and connection to an external power supply or an external radio.
9	Radio antenna interface	For connection to the radio antenna.
10	Microphone	For voice input.
11	Type-C interface	For data transmission and charging.
12	SIM card slot	Insert a SIM card into this slot.
13	Speaker	For voice output.
14	Bottom camera	For AR stakeout.
15	Front camera	For image measurement.

Note:

- Do not plug or unplug the charger repeatedly during charging.
- Charge the receiver at an ambient temperature between 0°C and 35°C.
- Charge the receiver at a well-ventilated place, away from direct sunlight.
- Do not disassemble the receiver without authorization. In case of a fault, contact the maintenance staff or your dealer.
- Repair or replace the pole immediately if it is damaged.
- To ensure the accuracy of image measurement, keep the front camera clean.

 ©FJDynamics. All rights reserved.

CAUTION

Burn Hazard
Coverings on the receiver or the external radio may affect heat dissipation.
➔ Reduce or remove such coverings.
➔ Maintain good ventilation.

WARNING

Sharp Tips
Sharp tips of the pole may cause personal injury.
➔ Use the pole with caution.

DANGER

Lightning Strikes
Usage of the antenna and the pole during thunderstorms.
➔ Do not use the antenna and the pole during thunderstorms.

EN

1.3 Field Controller



©FJDynamics. All rights reserved.

No.	Name	Description
1	SIM card slot	Insert the SIM card into this slot.
2	Screen	Show the software information.
3	Physical keypad	For information input.
4	Type-C interface	For charging and data transmission.
5	Speaker	For voice output.
6	Rear camera	Take pictures and record videos.

EN

2 Operation Instructions

2.1 Overview of Operation Procedure

This manual describes the main workflow for the first time use of the product.

2.2 Measurement Procedure

2.2.1 Setting Up the Instruments

2.2.1.1 Setting Up the Rover

Fix the field controller bracket on the telescopic pole, install the field controller on the bracket, and mount the receiver on the pole.

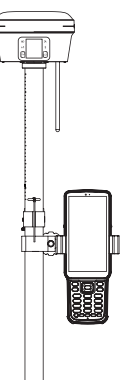

!	**Note:** Connection to the radio antenna is required in the radio mode, but not in the network mode.

 ©FJDynamics. All rights reserved.

2.2.1.2 Setting Up the External Radio

Set up the tripod over a known point or an unknown point, and install the base station receiver on the extension pole of the tripod, or on the base of the tripod.

!	**Note:** When setting up a base station over a known point, use a base purchased separately for centering and levelling.

EN

The external radio of the base station is set up as below.

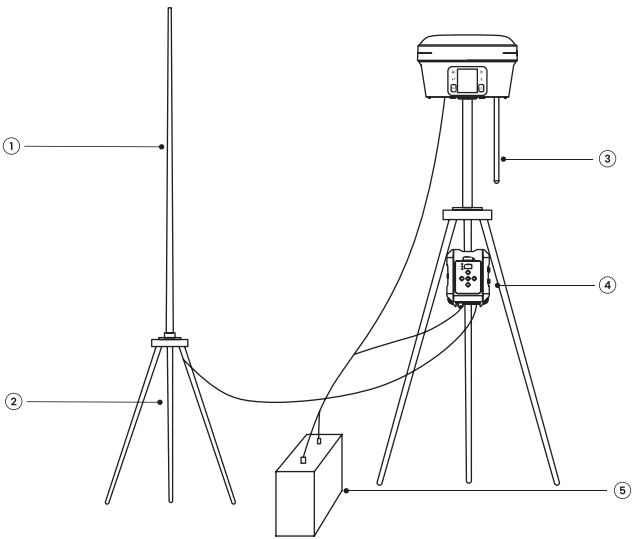

©FJDynamics. All rights reserved.

No.	Name	Purpose
1	Radio antenna	External radio antenna.
2	Tripod	Mount the radio antenna on it.
3	Receiver	Receive satellite signals.
4	Radio	External radio.
5	Battery	Power the receiver and the external radio. You are recommended to purchase it separately due to transportation restrictions.

EN

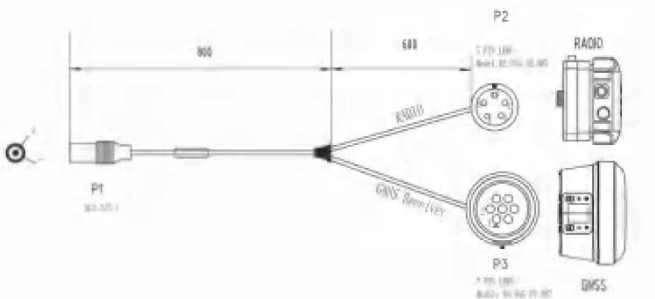

2.2.1.3 Setting up the Internal Radio

Mount the receiver on the tripod and fix the tripod on the ground.

!	**Note:** The internal radio covers a range of 5–10 km in open areas without obstructions.

 ©FJDynamics. All rights reserved.

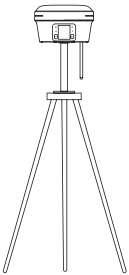

EN

2.2.2 Connecting the Devices

Launch the field controller app, tap **Settings** > **Communication**, set **Connection Mode** to **Bluetooth**, and then select the device name that starts with "GNSS" from **Bluetooth Devices**. The connection is successful if **Connected** is shown.

Select "WiFi", find the device name starting with "GNSS" in the WiFi device list and click on it (the initial password is 12345678). If it displays "Connected", it means the connection is successful.



©FJDynamics. All rights reserved.

3 Appendix

3.1 Specifications

EN

GNSS Receiver		
System	Operating system	LINUX
	RAM	3 GB
	ROM	32 GB
GNSS	Signal tracking	GPS: L1, L1C/A, L2C, L2P, L5
		BDS-2: B1I, B2I, B3I
		BDS-3: B1I, B3I, B1C, B2a, B2b
		GLONASS: G1, G2, G3
		Galileo: E1, E5a, E5b, E6C
		QZSS: L1, L2C, L5, L1C
		SBAS: L1C/A, L5
		IRNSS: L5
		L-band
	Time to first fix	< 20s (cold start)
		< 10s (hot start)
	Signal reacquisition	< 1s
	Pseudorange accuracy	≤10 cm
	Carrier phase accuracy	≤1 mm
	RTK initialization time	<5s (baseline <10 km)

 ©FJDynamics. All rights reserved.

GNSS Receiver		
GNSS	Initialization reliability	＞ 99.9 %
	Channels	1408
	GNSS positioning accuracy	Single-point positioning (RMS): Horizontal: 1.5 m Vertical: 2.5 m
		Static accuracy (RMS): Horizontal: ±(2.5+0.5×10^{-6}×D) mm Vertical: ±(5.0+0.5×10^{-6}×D) mm D refers to the baseline length in mm.
		RTK accuracy (RMS): Horizontal: ± (8+1×10^{-6}×D) mm Vertical: ± (15+1×10^{-6}×D) mm D refers to the baseline length in mm.
	AR accuracy	±2.5 cm
	Image measurement accuracy	±3 cm (2–15 m)
	Timing accuracy	20 ns
	Update rate	Raw observation data: 1, 2, 5, 10 Hz
		Real-time positioning data: 1, 2, 5, 10 Hz
	IMU update rate	200 Hz
	Data format	RTCM2.X (input), RTCM3.X, CMR (input), NMEA-0183, RINEX
Bluetooth	Protocol	2.1 EDR/3.0 HS/4.2 LE/5.0 LE
Wi-Fi	Protocol	2.4&5 GHz, 802.11a/b/g/n/ac
4G	Protocol	TDD-LTE, FDD-LTE, WCDMA, GSM, EDGE
INS	Tilt measurement	10 mm + 0.7 mm/° tilt (for a tilt of no larger than 30°, the accuracy is < 2.5 cm)

©FJDynamics. All rights reserved.

EN

GNSS Receiver		
Screen	Size	1.41-inch
	Resolution	320×360 dots
	Brightness	350 cd/m²
Internal radio	Transmit power	≤ 2W
	Modulation type	GMSK or 4FSK
	Protocol	TRIMTALK, TRIMMARK3, TT450S, TRANSEOT, SATEL
Battery	Battery capacity	7,000 mAh
	Battery life	Base: 10 h Rover: 15 h
Power supply	Voltage	USB PD fast charging 30 W Aviation connector: 9–28 V DC
Indicator	Type	Power, data, satellite, and Bluetooth
Size, weight, and IP rating	Size	∅ 130×83 mm
	Weight	970 g
	IP rating	IP68
Environmental requirements	Operating temperature	-30°C to 60°C
	Storage temperature	-40°C to 70°C
	Humidity	100%

 ©FJDynamics. All rights reserved.

Field Controller		
System	Operating system	Android 11
	CPU	Octa-core 2.0 GHz processor
	SIM card	Dual card single pass
	RAM	4 GB
	ROM	64 GB (expandable to 256 GB)
GNSS performance	Signals received	GPS/BDS/GLONASS
	Update rate	1 Hz–10 Hz
Data communication	Bluetooth	BT5.0 (BLE)
	Wi-Fi	IEEE 802.11 a/b/g/n 2.4G/5G dual-band
	Network	4G
Screen and keypad	Screen size	5.5-inch sunlight readable touchscreen
	Resolution	720 × 1440
	Keypad	Physical keypad
Battery	Battery capacity	7,700 mAh
	Charging voltage	9 V
	Battery life	≥ 10 h
	Maximum charging current	1.1 A
Size, weight, and IP rating	Size	221×77.7×16 mm
	Weight	340 g
	IP rating	IP67

©FJDynamics. All rights reserved.